SLID'UP by MANTION

INSTRUCTION DE MONTAGE
MONTAGEANLEITUNG
INSTRUCTIONS FOR ASSEMBLY
INSTRUCCIONES DE MONTAJE
INSTRUKCJA MONTAŻU

SLID'UP 200

SU5147
SU5148

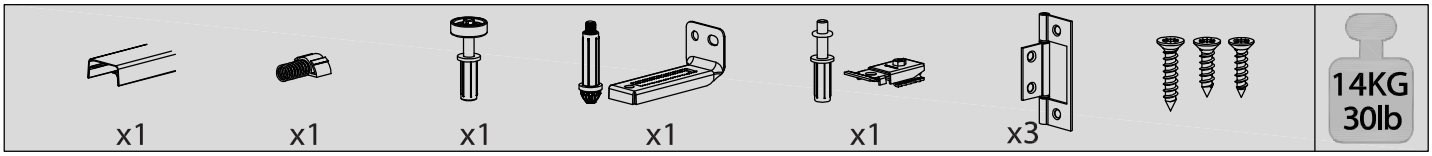

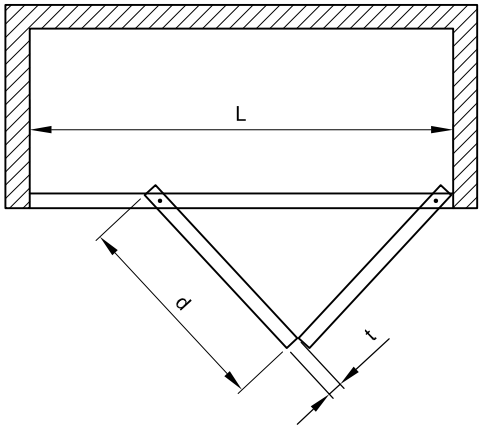

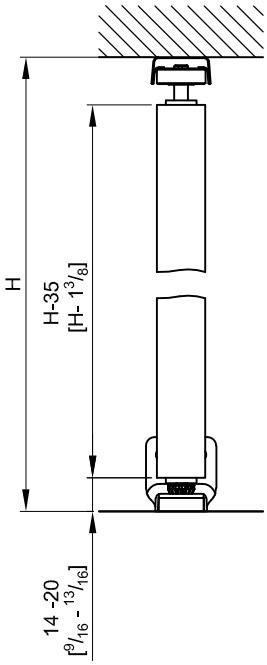

t [mm]	<28	28÷30	31÷38
x [mm]	0	2	4

t [in]	<1 1/8	1 1/8÷1 1/4
x [in]	1/16	1/8

d=(L/2-4)-x
[d= (L/2 - 3/16) - x]

1

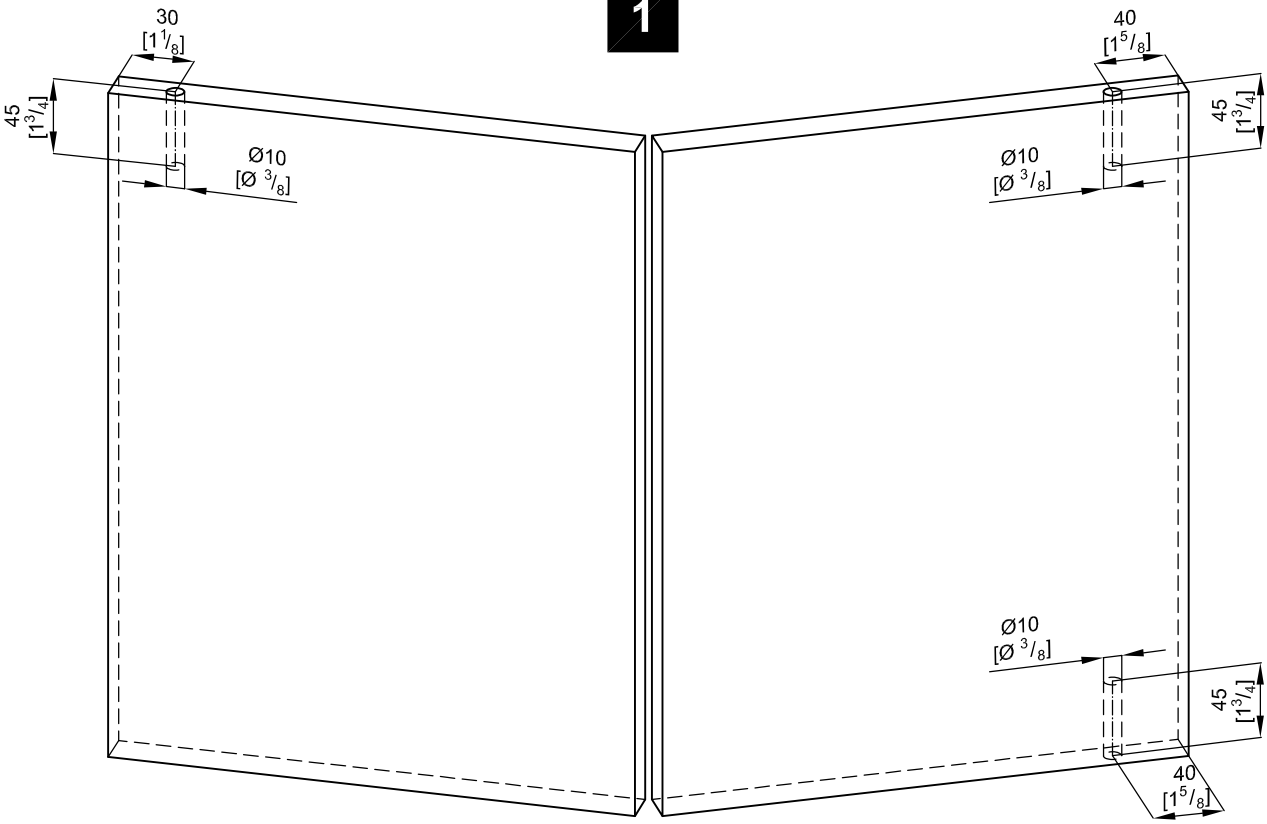

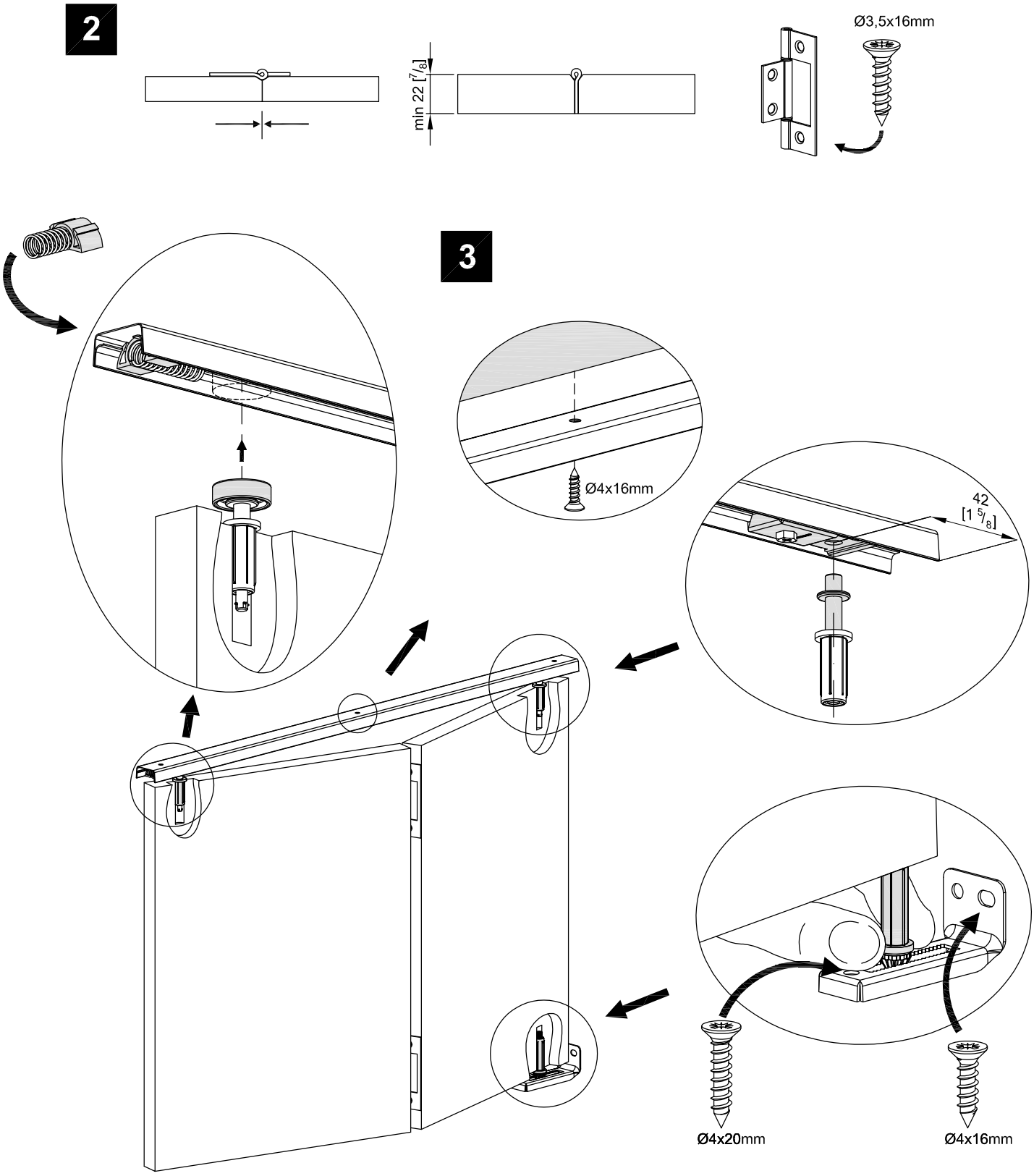
2
min 22 [7/8]
Ø3,5x16mm
3
Ø4x16mm
42
[1 5/8]
Ø4x20mm
Ø4x16mm